Technical Information
Ti 009G/03/ae

4000 Advanced Technology Transmitter

Transmission of level and temperature data for inventory management systems

The 4000 ATT shown attached to a Model 2500 ATG

Applications

Accuracy, reliability and mechanical simplicity make the Endress+Hauser Model 4000 Advanced Technology Transmitter (ATT) a truly effective source of level and temperature information.

The 4000 ATT has no complex components, in fact, there is just one moving part, designed to provide accurate results every time, even under extreme environmental conditions found in the oil & gas industries.

Features & Benefits

- Transmits level and temperature information.
- Mounts to all standard float gauges.
- Designed for mechanical simplicity – only one moving part.
- Never requires mechanical calibration.
- Communicates over most common field buses.
- Companion devices to support digital and analog I /O local display and averaging temperature.
- Extensive lightning and transient protection.

Online
www.systems.endress.com

Endress+Hauser
Systems & Gauging

Measuring System

The Advanced Technology Transmitter

The Model 4000 Advanced Technology Transmitter (ATT), in conjunction with a host, represents a remote data acquisition and communications system for use in bulk storage measurement applications.

Operation

The 4000 ATT is directly coupled to a mechanical float gauge, such as a Model 2500 ATG, which provides the primary level measurement. To determine the increases or decreases in level the 4000 ATT uses an optical encoder that is accurate to within 0.04” (1 mm). This value is verified by a check disk every 3.9” (100 mm).

System connection

The 4000 ATT can be mounted to all standard float gauges. and there is no need to remove it from the gaugehead for calibration - just enter level calibration with a hand-held terminal or download from a host. The host computer collects measurement information by polling the Advanced Technology Transmitter over a variety of communication interfaces such as EIA485 or Mark/Space. Several communication protocols are supported, among them are MODBUS, Varec Mark/Space, Varec Matrix, Whesso Bus, GSI MODBUS®/ASCII, L&J Tankway, GPE Current Loop and Tiway.

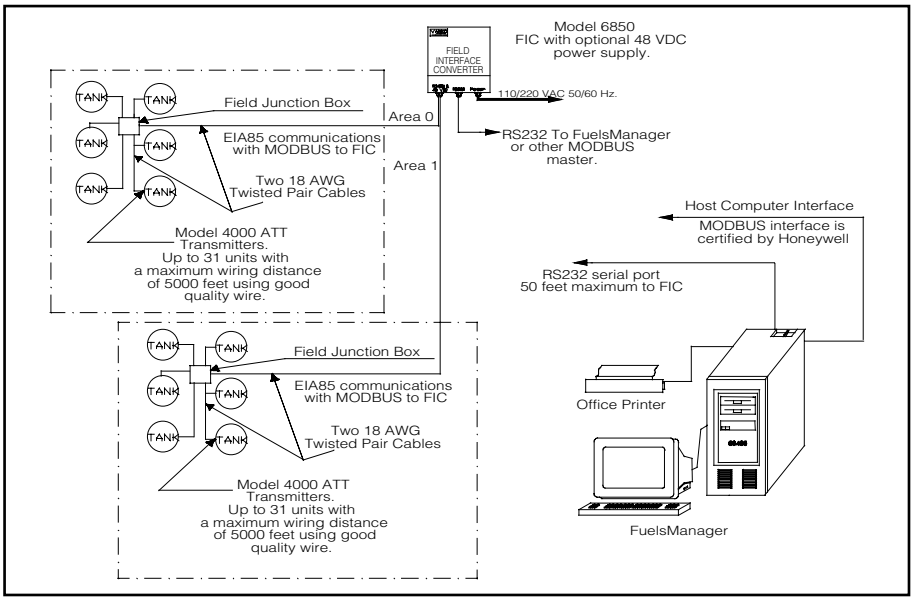

Typical EIA485 system connection

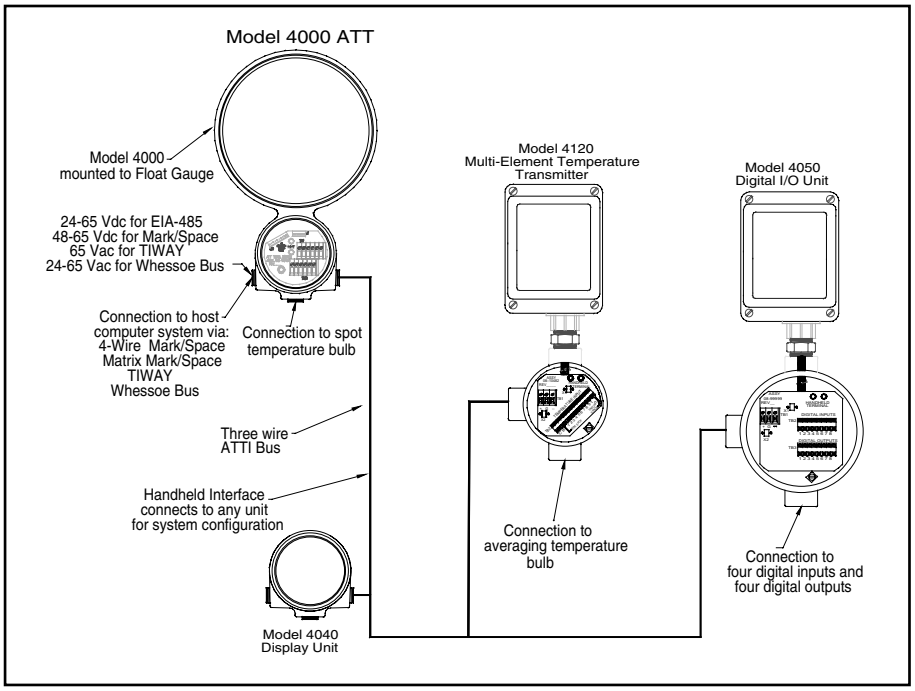

The 4000ATT and associated product connections

Installation

Construction

Supplied with its own junction box and safely housed in its die-cast explosion-proof and epoxy-coated aluminum enclosure, the 4000 ATT is rated IP65 (NEMA 4), so it can be used in hazardous areas, operating within a temperature differential of between -40 °F and +185 °F (-40 °C and +85 °C). Two covers are provided to permit access to both the electronics and termination (junction box) enclosures.

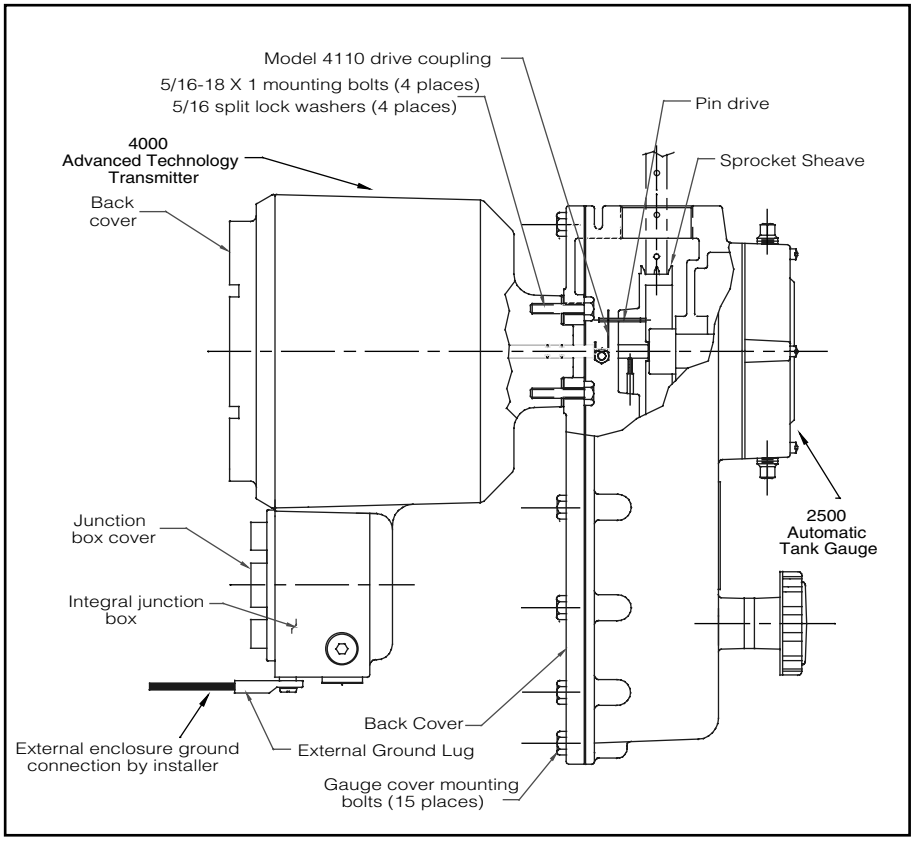

The 4000 ATT shown attached to a Model 2500 ATG

Mounting the ATT

The ATT is bolted to a mechanical float gauge (such as the 2500 ATG), it may also be mounted to *Whessoe, Sakura, Tokyo-Keiso, Shand & Jurs, and Gauging Systems, Inc.* float and tape gauges. The specific adapter must be specified when an order is made.

Mounting the ATT to the Level Gauge is accomplished in the following manner,

1. Remove the back cover of the level gauge.

2. Remove the access cap from the back cover of the level gauge.

3. Mount the ATT in place of the access cap, making certain that the word "TOP" cast into the housing lines up with the top of the level gauge back cover.

4. Install the Level Gauge Back Cover/Transmitter on to the Level Gauge. Make certain that the slot in the ATT drive coupling engages with the pin on the tape sheave of the Level Gauge.

5. Proceed with field wiring as described under configuration section

Configuration

Hardware Configuration

The Model 4000 Advanced Technology Transmitter must be configured for the specific tank, attached sensors, and host interface. All configuration is performed using the Model 1200 Handheld Terminal or a download from host computer software, such as FuelsManager. However, certain parameters such as communication address and speed must be configured via the Model 1200 Handheld Terminal. It connects to the same ATTI bus used to interconnect other input/output devices to the 4000 ATT. There is a special connection located inside the junction box for the Handheld Terminal.

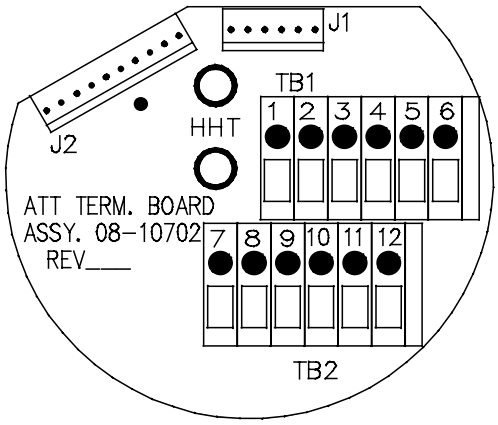

Terminal Block One TB1

1	L+	= ATTI expansion Bus + power
2	HPORT	= ATTI bus HART Signal
3	L-	= ATTI expansion Bus - power
4	C	= RTD C lead
5	B	= RTD B lead
6	A	= RTD A lead

Terminal Block Two TB2

12	S	= Space or EIA485 +
11	M	= Mark or EIA485 -
10	B +	= ATT + power
9	B -	= ATT - power
8	–	= Reserved
7	–	= Reserved

Right
The 4000 ATT terminal connections

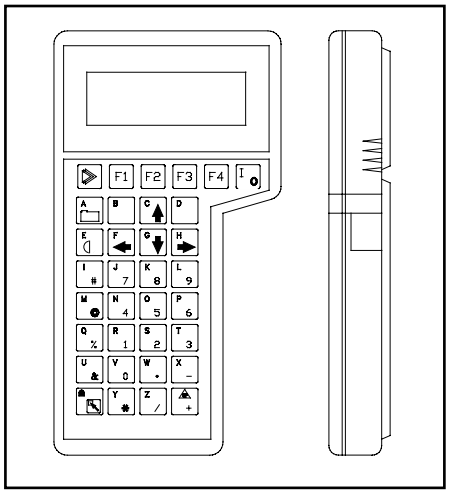

The 1200 Hand Held Terminal

Wiring

Wiring to the 4000 ATT consists of connecting power, host communication, RTD input and an optional ground connection. The procedure used to wire the 4000 ATT to the host computer depends on the type of host interface option ordered with the 4000 ATT.

WARNING
The Model 1200 Handheld Interface on the 4000 ATT is not Intrinsically Safe. Care must be taken to only use in a non-hazardous environment

Configuration Parameters

Configuration parameters associated with 4000 ATT operation can be divided into the following areas:

- General Configuration - includes units of measure, level calibration, temperature type selection, and alarm setpoints.

- Host Configuration - includes the type of host interface used, baud rate selection, and emulation modes for other level transmitters.

A full list of configuration parameters and instructions can be found in the 4000 ATT operation manual.

Connecting Input Power

An external grounding lug is provided on the 4000 ATT. A connection from the ground lug to earth ground must be made before any other wiring connections are made.

WARNING
When connecting DC power leads to the 4000 ATT, make certain that power is OFF.

The 4000 ATT operates on a 24-48 volts DC power source. The input power connection to the 4000 ATT is accomplished in the following manner.

- Connect the positive side of the power supply to terminal 10, B+, and the negative side to terminal 9, B-, of the terminal block assembly.

Configuration

ATT EIA485 Wiring

The ATT uses a 2-wire EIA485 hardware interface to communicate with the MODBUS® master. EIA485 is a high speed differential communications network which allows up to 32 devices to operate on one network. The 4000ATT and MODBUS® master share a twisted pair of wires to communicate.

• Using one shielded twisted pair of 18 AWG wire connect the EIA485+ communication line to terminal 12, S/485+, and the EIA485- communication line to terminal 11, M/485- of the terminal block assembly.

• Terminate the EIA485 bus at the ATT most distant from the host computer by placing a 120 Ohm 1/2 Watt resistor between terminal 12, S/485+, and terminal 11, M/485-, of the terminal block.

• Wire the EIA485 ground to terminal 9, B-, of the terminal block.

ATT Mark/Space Wiring

For an 4000 ATT using the Mark/Space field communications option, the following additional wiring connections must be made.

• Run two twisted pairs of 18 AWG wire (Mark/Space wires) into the 4000 ATT through the conduit entry along with the 48 Vdc power wiring.

• Connect the Mark line to terminal 11, M/485-, and the Space line to terminal 12, S/485+, on the terminal block assembly.

Connecting the RTD

The following describes how the 4000 ATT is wired to a RTD device. The 4000 ATT's temperature circuit is designed to work with a platinum or copper 3-wire RTD. Please wire as follows:

• Connect the RTD's A terminal to the ATT's terminal 6, A.

• Connect the RTD's B terminal to the ATT's terminal 5, C.

• Connect the RTD's C terminal to the ATT's terminal 4, C.

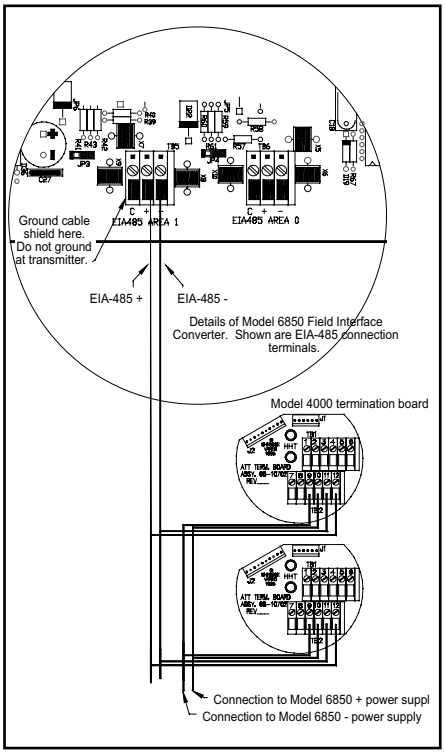

Wiring connection for a 6850 Field Interface Converter connected to a series of 4000 ATTs

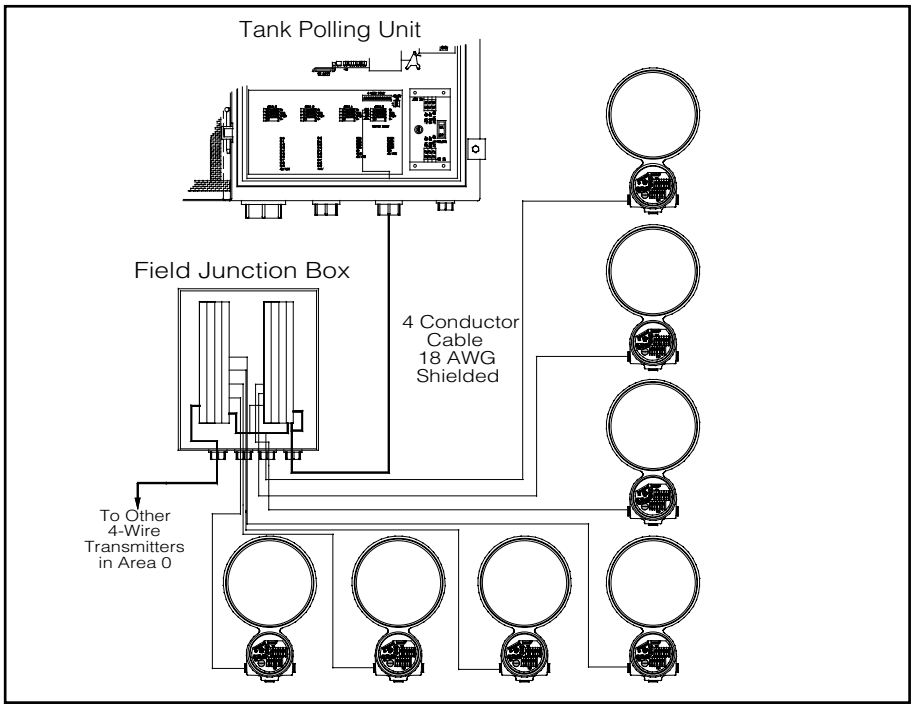

Right
Basic Mark Space wiring for a number of 4000 ATTs connected to a TPU through a junction box

Technical Data

Specifications and Physical Characteristics
The following specifications apply to the Whessoe Varec Model 4000 Advanced Technology Transmitter assembly over the normal operating temperature range.

Environmental

Temperature -40 °F to +185 °F (-40 °C to +85 °C) (operating)
Humidity -0 to 95% (non-condensing)
Transient Lightning Protection Meets ANSII/IEEE C62.41
EMI Meets SAMA 33.1C
Vibration Shock Meets SAMA PMC 31.1

Physical

Housing Aluminum NEMA 4X, NEMA 7
Bolts Plated carbon steel per ASTM A449, Grade 2
Paint Epoxy-polyester
Dimensions 7.5" (190.5 mm) diameter x 8.0" (203.2 mm) deep
Net Weight 4lbs (1.8 kg)
Shipping Weight 8 lbs (3.6 kg)

Input Power

18 - 65 Vdc, Note: Mark/Space Communications requires 48 Vdc
3 mA typical at 48 Vdc
150 mW, Nominal

Level Measurement

Resolution 0.04 in (1.0 mm) - Encoder Accuracy
Counter Level Range 0 –138 ft (0 – 42 m)
Count Verification Check Disk
Level Data Type Absolute with Calibrated Level
Calibration Level Software Configured
Units of Measure Software Configured
Direction of Rotation Software Configured
Rotational Speed 1000 RPM Maximum @ 100% accuracy - without losing synchronization with the level gauge.
Gear Ratio 1:1 - No Gears
Communications Check Depends on communication system
Count Error Status Flag to System
Battery Low Status Flag to System
Battery Operation 240 Hours (with automatic shut-off after 24 hours)
Battery Shelf Life 10 Years

Safety Certifications and Approvals

ETL and ETLc Certified for use in hazardous areas, Class 1, Div 1, Groups C&D. Class II, Div I. Class III, CAN/CSA 22.2 No. 30-M1986, and FM 3600, 3615.
CENELEC certification is EExd IIB T6, Demko 96D.120092.
IP 65 environmental enclosure rating
NEMA 4 environmental enclosure rating.

Technical Data

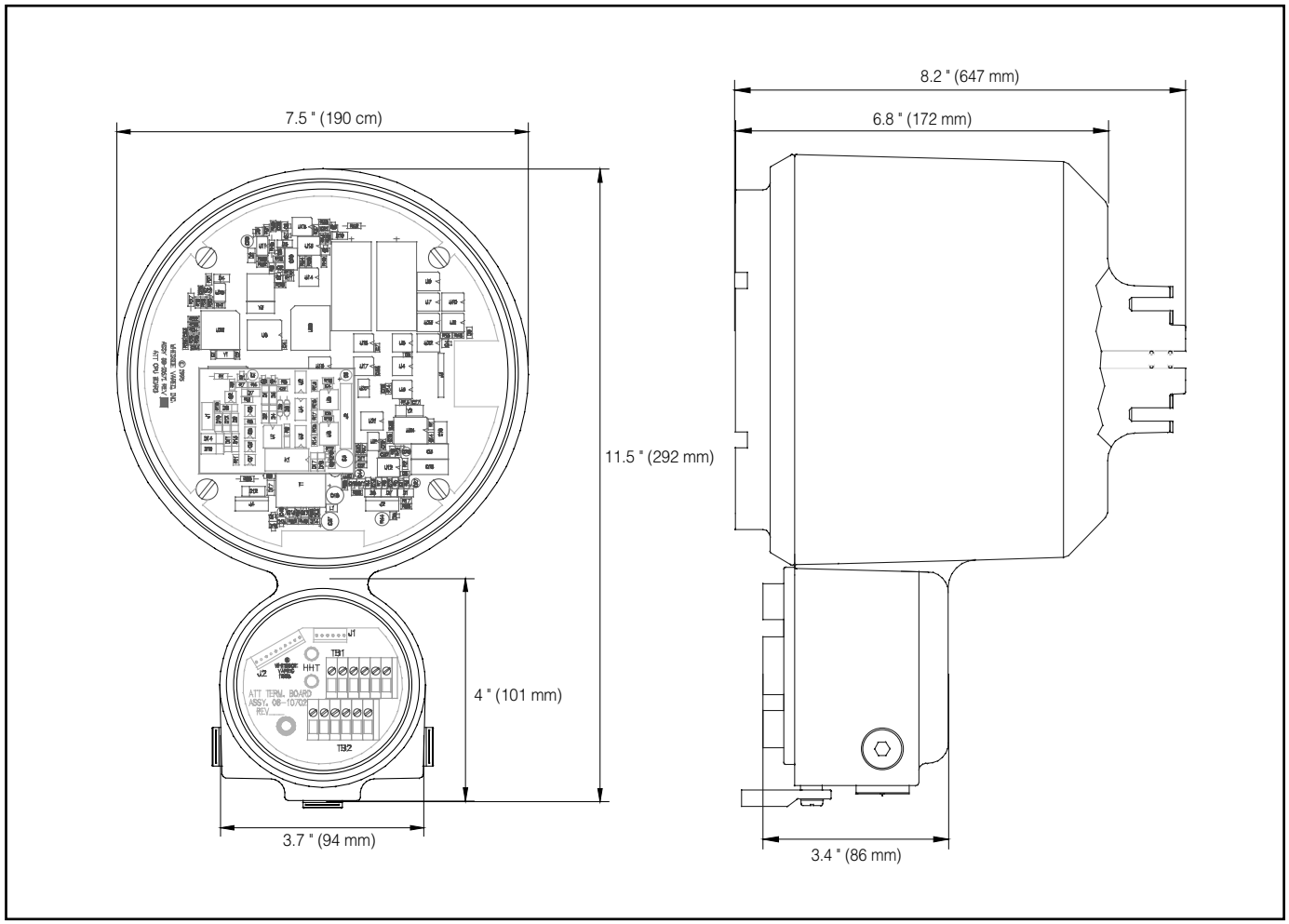

Dimensional drawing, front view has covers removed

4000 Advanced Technology Transmitter

Order Codes

4000 Advanced Technology Transmitter (ATT)

Communications

48	EIA485 - MODBUS®
M4	Mark Space - Micro 4-Wire (1800/1900)
MX	Mark/Space - Matrix (1600/1700)
WB	Whessoe Bus - Current Loop (1315)
EN	GPU (Enraf)
GS	1901 TC "four-wire" (GSI)
LJ	Tank Way (L&J)
TI	TI-WAY

Approvals

00	No Approval
FM	Factory Mutual
CS	CSA
CE	CENELEC

Mounting

0	Model 2500 ATG Series
1	Adapter for Whessoe Varec or L&J/S&J 92513, 92514, 92020, 92030
2	Adapter for Whessoe Varec or L&J/S&J 92006, 2006, 2026, 2036
3	Adapter for Sakura LT-101

4000				product designation

Supplementary Documentation

- ❑ 4000 Advanced Technology Transmitter System Information Si 009G/03/en/03.00
- ❑ 4000 Advanced Technology Transmitter Instruction Manual

Locations

Endress+Hauser
Systems & Gauging Ltd.
Heighington Lane
Newton Aycliffe
Co Durham DL5 6XZ
United Kingdom
Tel: +44 (0)1325 321111
Fax: +44 (0)1325 300840

Endress+Hauser
Systems & Gauging S.A.
Rue de Bitche
62100 Calais
France
Tel: +33 (0)3 21-96-49-93
Fax: +33 (0)3 21-34-36-12

Sakura Endress Co., Ltd.
862-1 Mitsukunugi
Sakaigawa-mura
Higashi-Yatsushiro-Gun
Yamanashi Prefecture
406-0846 Japan
Tel: +81 (0)552-66-4964
Fax: +81 (0)552-66-4969

Endress+Hauser
Systems & Gauging, Inc
2901 W. Sam Houston
Parkway North
Houston, TX 77043
USA
Tel: +1 (832) 590-6200
Fax: +1 (832) 590-6201

Endress+Hauser
Systems & Gauging, Inc.
1800 Diagonal Road
Suite 300
Alexandria, VA 22314
USA
Tel: +1 (703) 837-9202
Fax: +1 (703) 837-9209

Whessoe Varec, Inc.
10800 Valley View Street
Cypress, CA 90630
USA
Tel: +1 (714) 761-1300
Fax: +1 (714) 952-4503

Systems & Gauging Headquarters

Endress+Hauser
Systems & Gauging, Inc.
5834 Peachtree Corners East
Norcross (Atlanta), GA 30092
USA
Tel: +1 (770) 447-9202
Fax: +1 (770) 662-8939
http://www.systems.endress.com

Endress+Hauser
Systems & Gauging

Technical information
Ti 009G/03/ae/05.00
Printed in USA